Manual | Form 3+

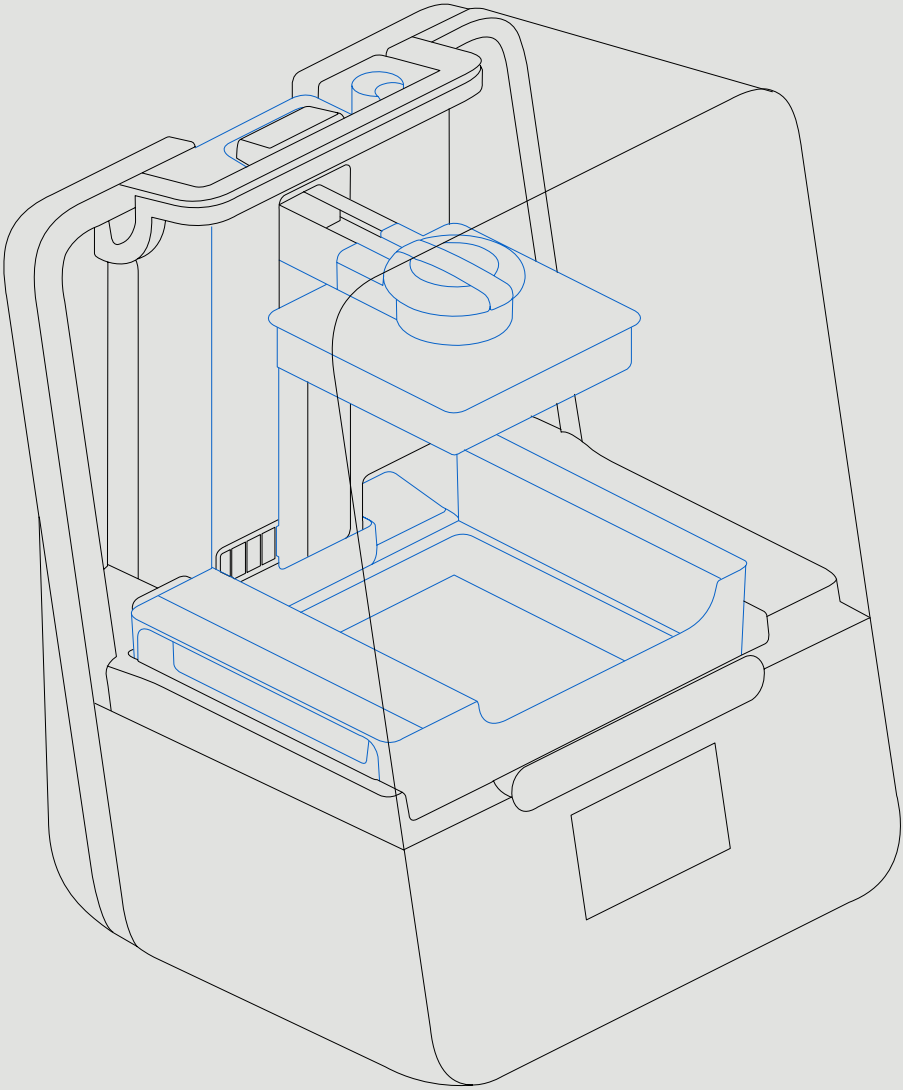

formlabs

Installation and Usage Instructions

Form 3+

Low Force Stereolithography (LFS) 3D Printer

Original English instructions

Read this manual carefully and keep it for future reference.

Sept 2023

REV 02

© Formlabs

formlabs

1. Table of Contents

1. Preface . . . 4
1.1 Read and Retain Instructions . . . 4
1.2 Obtaining Documentation and Information . . . 4

2. Introduction . . . 6
2.1 Intended Use . . . 6
2.2 Technical Specifications . . . 7
2.3 Product Elements . . . 8
2.4 Understanding the Display . . . 8

3. Safety Warnings . . . 9
3.1 Component and Subsystem Safety . . . 9
3.2 Personal Protective Equipment (PPE) . . . 11
3.3 Specifications of Tools to Be Used . . . 11

4. Preparation and Set Up . . . 12
4.1 Arranging the Workspace . . . 12
4.2 Unboxing the Form 3+ . . . 12
4.3 Installing the Form 3+ . . . 13
4.4 Connecting the Form 3+ . . . 15
4.5 Transporting the Form 3+ . . . 16

5. Print with the Form 3+ . . . 18
5.1 Operational Environment . . . 18
5.2 Printing . . . 18
5.3 Finishing . . . 18
5.4 Managing the Printer . . . 19
5.5 Emergency and Exceptional Situations . . . 19

6. Maintenance . . . 21
6.1 Inspecting the Product . . . 21
6.2 Inspection Tasks Between Prints . . . 22
6.3 Monthly Inspection and Maintenance Tasks . . . 22
6.4 Periodic Inspection and Maintenance Tasks . . . 22
6.5 Planned Maintenance Procedures . . . 24

7. Troubleshooting and Repair . . . 26
7.1 Collecting Diagnostic Logs . . . 26
7.2 Performing a Factory Reset . . . 26
7.3 Cleaning After a Failed Print . . . 26
7.4 Troubleshooting . . . 27
7.5 Disassembly and Repair . . . 29

8. Disposal . . . 30
8.1 Guidance for Recycling and Disposal . . . 30

9. Index . . . 32

10. Glossary . . . 33

11. Product Compliance . . . 37

WARNING

Read and understand this manual and its safety instructions before using the Form 3+. Failure to do so can result in serious injury or death.

DISCLAIMER

Formlabs has made every effort to make these instructions as clear, complete, and correct as possible. The information provided in this documentation contains general descriptions and/or technical characteristics of the performance of the products contained herein. This documentation is not intended as a substitute for and is not to be used for determining suitability or reliability of these products for specific user applications. It is the duty of any such user or integrator to perform the appropriate and complete risk analysis, evaluation, and testing of the products with respect to the relevant specific application or use thereof. Neither Formlabs nor any of its affiliates or subsidiaries shall be responsible or liable for misuse of the information that is contained herein. Notify us if you have any suggestions for improvements or amendments or have found errors in this publication.

Copyright © 2022 by Formlabs. All rights reserved.

support.formlabs.com

TRADEMARKS

All product names, logos, and brands are property of their respective owners. All company, product, and service names used in this manual are for identification purposes only. Use of these names, logos, or brands does not imply endorsement.

DOCUMENT REVISIONS

Date	Version	Document Changes
May 2022	REV 01	Initial publication
Sept 2023	REV 02	Updated compliance information

1. Preface

Congratulations on purchasing the Form 3+. On behalf of the Formlabs team, we thank you for your purchase. The instructions in this manual provide information for skilled persons to understand safety, setup and installation, operation, and maintenance of the Form 3+ 3D printer. These instructions are intended for anyone who is installing, operating, maintaining, or otherwise interacting with the Form 3+. Supervise young or inexperienced users to ensure enjoyable and safe operation.

1.1 Read and Retain Instructions

Read and understand this manual and its safety instructions before using the Form 3+. Failure to do so can result in serious injury or death. Keep all safety information and instructions for future reference and provide them to subsequent users of the product.

Follow all the instructions. This will avoid fire, explosions, electric shocks, or other hazards that may result in damage to property and/or severe or fatal injuries.

The Form 3+ shall only be used by persons who have fully read and understand the contents of this usage manual. Ensure that each person who uses the Form 3+ has read these warnings and instructions and follows them. Formlabs is not liable for cases of material damage or personal injury caused by incorrect handling or non-compliance with the safety instructions. In such cases, the warranty will be voided.

1.2 Obtaining Documentation and Information

Visit support.formlabs.com to:

- access the latest version of all Formlabs product documentation.
- contact Formlabs to request documentation, usage instructions, and technical information.
- submit any comments or feedback regarding what is good and what can be improved. Formlabs values comments from its users.
- request additional training.

1.1.1 Support and Service

Retain a record of the original purchase to request warranty services. Service options depend on the status of the specific printer's warranty. Include the serial name of the product when contacting Formlabs for product support.

Instead of a serial number, all Formlabs machines have a serial name, which is a unique identifier to track the history of manufacturing, sales, and repair, and to distinguish usage when connected to a network. The serial name is on the back panel of the machine in this format: AdjectiveAnimal.

Service providers of Formlabs products also provide support and service. To the extent that Formlabs or a certified service provider offers other or extended warranties, the terms of the separate offer may apply. For products purchased from certified service providers, contact the original service provider for assistance before contacting Formlabs.

For any support or service requests, including product information, technical assistance, or assistance with instructions, contact Formlabs Services or a certified service provider:

support.formlabs.com	**USA** Formlabs, Inc. 35 Medford St. Somerville, MA, USA, 02143	**Germany** Formlabs GmbH Nalepastrasse 18 12459 Berlin, Germany

1.1.2 Warranty

This product is protected under warranty. Formlabs offers a warranty for all Formlabs-branded hardware. Unless otherwise expressly stated, the Terms of Service, including the Warranty, constitute the entire agreement between you and Formlabs with respect to the Service and any product you purchase from Formlabs and supersedes all prior or contemporaneous communications, proposals, and agreements, whether electronic, oral, or written, between you and Formlabs. Read the warranty for more details on the Formlabs warranty for your region:

US	**formlabs.com/support/terms-of-service/#Warranty**
EU (EN)	**formlabs.com/support/terms-of-service/eu/**
EU (DE)	**formlabs.com/de/support/terms-of-service/eu/**
EU (FR)	**formlabs.com/fr/support/terms-of-service/eu/**

2. Introduction

2.1 Intended Use

The Form 3+ is a commercial, precision tool intended for use in the additive manufacture of end-user supplied designs from photopolymer resin. The final performance characteristics of cured photopolymer resin may vary according to your compliance with the instructions for use, application, operating conditions, material combined with, end use, or other factors.

NOTICE

In some cases, the additive manufacturing process may inherently result in variable performance characteristics between manufacturing runs or within a specific part. Such variances may not be apparent and may result in unexpected defects in additively fabricated parts.

WARNING

You shall independently verify the suitability of additive manufacturing, stereolithography, the Form 3+, and any specific designs or materials employed for the application and intended purpose before use. In no event shall Formlabs be liable for any loss, death, or bodily injury that you suffer, or that you cause to any third party, in connection with your use of Formlabs products. To the fullest extent legally permitted Formlabs EXPRESSLY DISCLAIMS ANY IMPLIED OR EXPLICIT WARRANTY OF FITNESS for a particular usage, the particular nature and circumstances of said usage being unforeseen and unforeseeable to Formlabs.

WARNING

Formlabs is not a manufacturer of medical devices. Formlabs provides tools and materials that may be used in many applications, but makes no claims as to the safety or effectiveness of any specific devices made using Formlabs products. Certain Formlabs products, such as those commonly known in the industry as “biocompatible” resins, have been engineered to comply with relevant industry standards. The specific standards and most relevant technical specifications may be identified within the technical data sheets and have been tested according to relevant testing protocols for those standards and specifications. Biocompatible resins are a speciality product, developed for use by medical professionals, and should be used in accordance with the instructions for use.

WARNING

- Do not modify – The Form 3+ is intended for use as-is. Modifying the printer without explicit approval and directions from Formlabs will invalidate your warranty, and could potentially ruin the machine and cause you bodily harm.

2.2 Technical Specifications

	Form 3+ Printer	Resin Cartridge	Form 3+ Resin Tank	Form 3+ Build Platform
Shipping Dimensions	57×51×69 cm (22.5×20×27 in)	24×20×8 cm (9.5×8×3 in)	35×30×8 cm (14×11.8×3.3 in)	18×17×8 cm (7×6.75×3 in)
Shipping Weight	22.7 kg (50 lb)	1.5 kg (3.3 lb)	1.4 kg (3.1 lb)	0.67 kg (1.5 lb)
Product Weight	17.5 kg (38.6 lb)	1.35-1.6 kg (3-3.5 lb)	0.8 kg (1.8 lb)	0.65 kg (1.4 lb)

3D Printing Technology	Low Force Stereolithography (LFS)
Minimum Dimensions for Convenient Access	Width: 40 cm (15.5 in) Depth: 53 cm (21 in) Height: 78 cm (30.5 in)
Weight	17.2 kg (37.9 lb)
Operating Temperature	Auto-heats to 35 °C (95 °F)
Temperature Control	Air heated print chamber
Power Requirements	100–240 V ~ 2.5 A 50/60 Hz 220 W
Laser Specifications	1 Light Processing Unit EN 60825-1:2014 certified Class 1 Laser Product 405 nm violet laser 250 mW laser
Laser Spot Size (FWHM)	85 microns (0.0033 in)
Radiation Information	The Form 3+ is a Class 1 Laser product. Accessible radiation is within Class 1 limits.
Connectivity	Wi-Fi, Ethernet, and USB
Ethernet Connectivity	RJ-45 Ethernet (10BASE-T/100BASE-TX/1000BASE-T) LAN Port Connect with an Ethernet cable (not included): minimum Cat5, or Cat5e or Cat6 for 1000BASE-T.
Wi-Fi Connectivity	Protocol: IEEE 802.11 b/g/n Frequency: 2.4 GHz, 5 GHz Supported security: WPA/WPA2
Sound Emission	Does not exceed 70 dB(A).
Printer Control	Interactive touchscreen
Resin Fill System	Automated
Build Volume	145×145×185 mm 5.7×5.7×7.3 in
Supports	Auto-Generated Removable

2.3 Product Elements

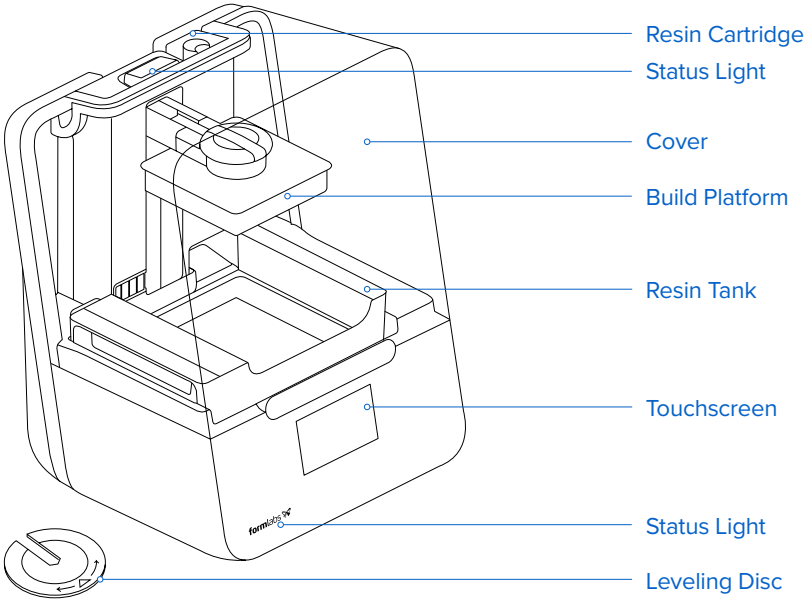

2.4 Understanding the Display

The Form 3+ display includes a touchscreen and status lights.

The touchscreen displays print information, settings, and error messages. It serves as the user interface for the Form 3+.

The status lights indicate the printer's state. Refer to messages on the touchscreen to understand the meaning of the status lights.

For detailed guidance and visual assistance, search on **support.formlabs.com.**

3. Safety Warnings

WARNING

Read and understand this manual and its safety instructions before using the Form 3+. Failure to do so can result in serious injury or death.

Supervise young or inexperienced users to ensure enjoyable and safe operation.
The instructions contain warnings and safety information, as explained below:

DANGER

Danger indicates a hazard with a high level of risk which, if not avoided, will result in death or serious injury.

WARNING

Warning indicates a hazard with a medium level of risk which, if not avoided, could result in death or serious injury.

CAUTION

Caution indicates a hazard with a low level of risk which, if not avoided, could result in minor or moderate injury.

NOTICE

Notice indicates information considered important, but not hazard-related.

WARNING: The laser beam is harmful to the eyes. Avoid direct contact.

DANGER: Isopropyl alcohol is a flammable chemical.

3.1 Component and Subsystem Safety

1.1.3 Laser

WARNING

Class 1 Laser Product. Only remove the shells of the printer with authorization from Formlabs or a certified service provider. Disconnect power before removing the shells.

Accessible radiation is within Class 1 limits. The laser diode used inside the device has the following specifications:

Diode:	**Violet (405 nm)**	**Max Output: 250 mW**

The laser beam is harmful to the eyes, so avoid direct contact. The Form 3+ contains an interlock system to automatically shut off the laser when the cover is open. If this system is tampered with or fails, there is a risk of exposure to Class 3B laser light.

Laser Certification:	**IEC 60825-1:2014**	**EN 60825-1:2014**

FDA performance standards for laser products except for deviations pursuant to Laser Notice No. 56, dated May 8, 2019

1.1.4 Sharp Tools

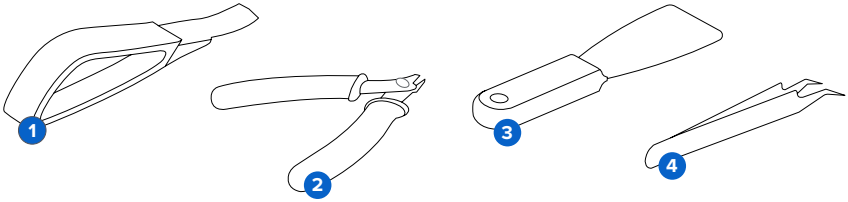

The accessories include sharp tools such as: a part removal tool 1, flush cutters 2, a scraper 3, and tweezers 4.

CAUTION

Cutting hazard. Using these tools on slippery surfaces (such as a resin-coated build platform) can result in sudden movement. Orient sharp tools away from yourself, especially when cutting or scraping.

1.1.5 Resin

Respect Formlabs resin like any household chemical. Follow standard chemical safety procedures and Formlabs resin handling instructions.

In general, Formlabs resin is not approved for use with food, drink, or medical applications on the human body. However, biocompatible resins, such as Dental SG Resin, are biologically safe for specific types and lengths of exposure to the human body. Refer to information about each specific resin for more detail.

WARNING

Never ingest resin in liquid or solid form. If swallowed, immediately call a poison center or medical professional.

NOTICE

Always consult the Safety Data Sheet (SDS) as the primary source of information to understand safety and handling of Formlabs materials.

1.1.6 Radio Interference

This equipment has been tested and found to comply with the limits for a Class B digital device, pursuant to CFR Title 47, Part 15 of FCC Rules. These limits are designed to provide reasonable protection against harmful interference when the equipment is operated in a commercial environment. This equipment generates, uses, and can radiate radio frequency energy and, if not installed and used in accordance with the instruction manual, may cause harmful interference to radio communications. Operation of this equipment in a residential area is likely to cause harmful interference, in which case the user will be required to correct the interference at their own expense.

Changes or modifications to this product not authorized by Formlabs could void the electromagnetic compatibility (EMC) and wireless compliance and negate your authority to operate the product.

This product has demonstrated EMC compliance under conditions that included the use of compliant peripheral devices and shielded cables between system components. It is important that you use compliant peripheral devices and shielded cables between system components to reduce the possibility of causing interference to radios, televisions, and other electronic devices.

CAUTION

Use of controls or adjustments or performance of procedures other than those specified herein may result in hazardous radiation exposure.

1.1.7 Isopropyl Alcohol (IPA)

NOTICE

Formlabs does not manufacture isopropyl alcohol. Consult the chemical manufacturer or supplier for detailed safety information. Carefully follow the safety instructions provided with the isopropyl alcohol that you purchase. Isopropyl alcohol can be flammable, even explosive, and should be kept away from heat, fire, or sparks. Any containers holding isopropyl alcohol should be kept closed or covered when not in use. We also recommend that you wear protective gloves and have good ventilation when working with IPA.

3.2 Personal Protective Equipment (PPE)

WARNING

Resin may cause skin irritation or an allergic skin reaction. Wear gloves when handling liquid resin or resin-coated surfaces. Wash skin with plenty of soap and water.

CAUTION

Some methods of support removal may cause small pieces of supports to break away. Beware of flying debris. Wear eye protection and gloves to protect the skin and eyes.

3.3 Specifications of Tools to Be Used

The Form 3+ shall only be used with supplied accessories and additional tools recommended by Formlabs. Third-party accessories and materials may cause damage.

Purchase additional supplies:

- Keep **paper towels** in stock to ensure a clean work environment for printing and finishing.
- Clean optical surfaces, including the optical window and the underside of the resin tank, with **PEC*PAD lint free wipes.**
- **Isopropyl alcohol (IPA, 90% or higher)** is the recommended solution for rinsing parts and cleaning liquid resin after each completed print.
- Connect the printer to a local area network with an **Ethernet cable.**
- Wear **disposable chemical-resistant gloves,** such as nitrile or neoprene, when handling resin or resin-coated surfaces and optics.
- Wear **safety glasses** when handling liquid resin, when removing printed parts, and when removing supports from a printed part.
- Clean the cover and outer shells with a **non-abrasive microfiber cloth** and **soapy water** or a **general purpose cleaner,** such as glass cleaner.

4. Preparation and Set Up

4.1 Arranging the Workspace

Choose a stable, level workspace to install and operate the Form 3+. Reserve the following minimum dimensions for the most convenient access:

Width: 40 cm (15.5 in) **Depth:** 53 cm (21 in) **Height:** 78 cm (30.5 in)

Allow additional space for accessories, such as the Form 3+ Finish Kit, Form Wash, and Form Cure.

4.2 Unboxing the Form 3+

During unboxing, inspect the Form 3+ for any damage or missing items. In the case of damage or missing items, contact Formlabs or the certified service provider.

To unbox the Form 3+:

1. Open the box from the top. If the box has a side gate, fold down the side of the box.
2. Use the provided handles to lift the printer, in its carrier tray, out of the box.
3. Remove the printer from the carrier tray and set the printer in its workspace.
4. Remove any additional wrapping and packaging from the outside of the printer.

NOTICE

Remove all packaging material and release the Light Processing Unit (LPU) housing before connecting power.

To release the LPU housing from its shipping position:

1. Open the printer cover.
2. Read and remove the instructional sticker wrapped around the LPU housing.
3. Locate the latch on the left side of the LPU housing.
4. Turn the thumb screws counter-clockwise by hand. Loosen and remove the two thumb screws and the latch.
5. Save the latch and screws along with the original printer packaging.

NOTICE

Save the Form 3+ packaging for transporting your printer. Original packaging is required for warranty service.

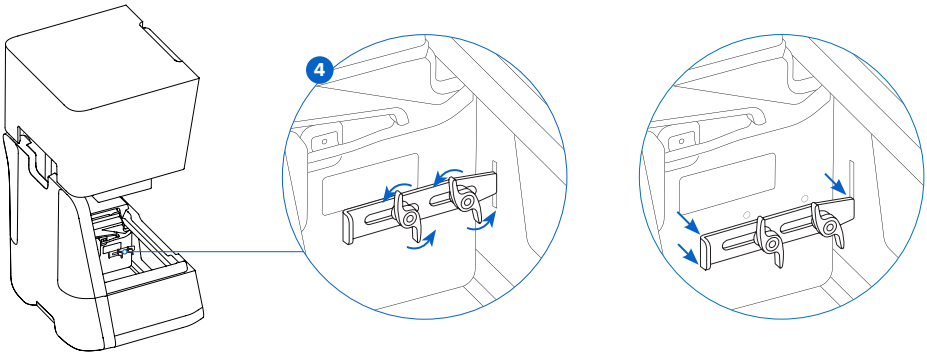

4.3 Installing the Form 3+

1.1.8 Connect the Cables

Connect the power cable to the printer and the power supply.

Files can be uploaded via USB, Wi-Fi, or Ethernet. For USB, connect the printer to a nearby computer. For Ethernet, connect the printer to an Ethernet port.

1.1.9 Level the Printer

NOTICE

It is important that the printer sits level so resin does not overflow from the tank during printing. All four feet must rest on a solid surface to ensure optimal print accuracy.

The Form 3+ must be completely level before printing can begin. If prompted, use the leveling disc to raise or lower each foot of your printer.

To level the Form 3+:

1. Connect the printer to power. If necessary, the touchscreen prompts use of the leveling disc.
   a. The initial printer setup sequence includes the leveling procedure.
2. Follow the on-screen instructions to adjust the feet under the printer.

3 Insert the round leveling disc under the designated corner. Push until the leveling disc clicks onto the foot.

4 Rotate the tool clockwise to raise and counter-clockwise to lower the height of the printer.

   b. The printer ships with each foot fully retracted. The height of the feet can only be raised during the initial printer setup.

5. Adjust the feet until the touchscreen indicates the printer is level.

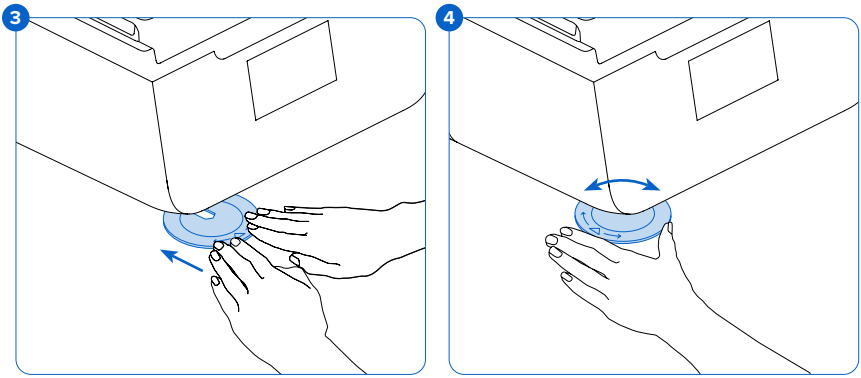

1.1.10 Insert the Resin Tank and Mixer

CAUTION

Spill hazard. Resin may spill over the tank walls if the resin tank tilts more than 5-10°. Hold the resin tank level with two hands. To inspect and clean the underside of the tank, empty the resin tank and/or take care to avoid spilling resin outside the tank.

WARNING

Resin may cause skin irritation or an allergic skin reaction. Wear gloves when handling liquid resin or resin-coated surfaces. Wash skin with plenty of soap and water.

To install the resin tank:

1. Open the printer cover.
2. Remove the lid of the tank case.
3. Remove packaging materials from the tank.
4. Lift the resin tank with one hand on each side.

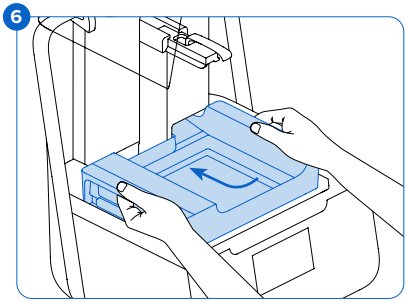

NOTICE

Avoid contaminating the underside of the resin tank with fingerprints or liquid resin.

5. Align the resin tank side walls with the left and right tank carrier rails.
6. Push the side handles - toward the back of the printer and downward - until the side walls lock into the rails. The resin tank clicks into place and sits firmly. A sensor detects the resin tank, and the status light illuminates.

To insert the mixer:

1. Orient the mixer with the flexure arms facing upward and toward the mixer case.
2. Slide the mixer to the left, into the mixer case. The flexure arms on each end click into place.

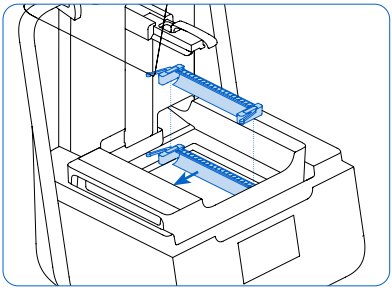

1.1.11 **Insert the Build Platform**

To insert the build platform:

1. Raise the platform lock.
4. Align the build platform with the platform carrier.
3. Push the build platform onto the platform carrier. A sensor detects the build platform, and the status light illuminates.
6. Lower the platform lock to secure the build platform.

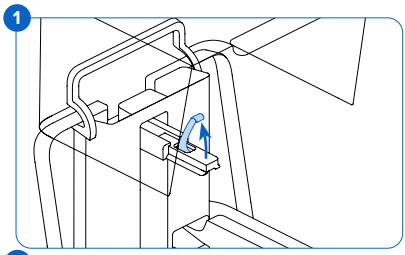

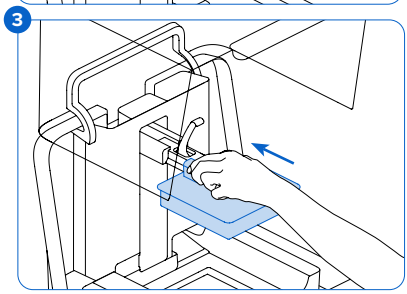

1.1.12 **Insert the Resin Cartridge**

1. Close the printer cover.
2. Shake the cartridge before each print to ensure the resin is mixed thoroughly. Shake the resin cartridge approximately every two weeks during storage to keep the formula well-mixed for the best print quality.
3. Remove the orange protective valve cover from the bottom of the cartridge. Consider saving the cover to protect the valve during storage.

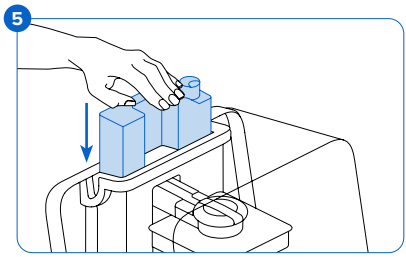

CAUTION

Spill hazard. Do not remove the rubber valve at the bottom of the cartridge. This bite valve controls the release of the resin. Removing the rubber bite valve allows resin to continuously flow and causes extreme damage to the machine. This damage is not covered by the warranty.

4. Align the cartridge with the opening in the back of the printer.
5. Push down on the cartridge handle until the top of the cartridge is level with the printer. A sensor detects the resin cartridge, and the status light illuminates.
6. Press open the vent cap, so that the resin tank fills correctly.

4.4 Connecting the Form 3+

Connect to the Form 3+ to upload and manage prints over Wi-Fi, USB, and Ethernet. The Form 3+ can connect directly to a computer with a USB cable. For remote uploading and monitoring, the Form 3+ supports both wired (Ethernet) and wireless (Wi-Fi) connections. Connect PreForm print preparation software to the same local-area network (LAN) as the printer in order to send a print job.

For a Windows operating system, after installing PreForm, check to ensure that Bonjour is properly installed. Bonjour is a piece of third-party software that is required to connect over Wi-Fi or Ethernet. See support.apple.com for assistance with Bonjour. The USB connection can still be used while the Form 3+ is connected to a LAN.

When the Form 3+ is connected to a LAN, its current status and print progress can be monitored with Dashboard: **formlabs.**

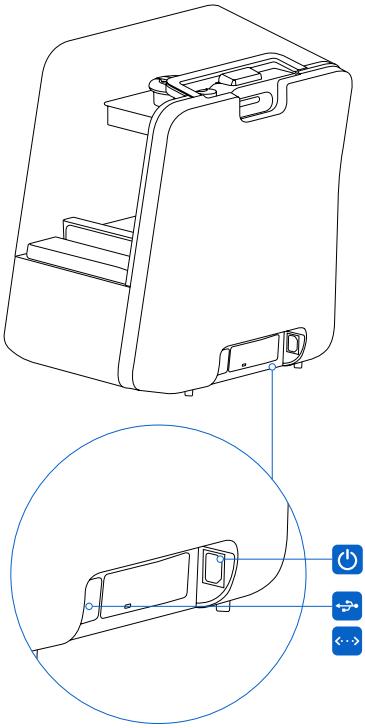

com/dashboard.

1.1.13 Connect with USB

Use the included USB cable for connecting a computer directly to the printer.

1. Plug one end of the USB cable into the back of the Form 3+.
2. Connect the other end to a computer's USB port .

1.1.14 Connect with Ethernet

The rear of the unit is equipped with a RJ-45 Ethernet (10BASE-T/100BASE-TX/1000BASE-T) LAN Port . Connect to a LAN with an Ethernet cable (not included): minimum Cat5, or Cat5e or Cat6 for 1000BASE-T.

3. Plug one end of the Ethernet cable into the back of the Form 3+.
4. Connect the other end to your LAN.

1.1.15 Connect with Wi-Fi

The Form 3+'s built-in Wi-Fi (IEEE 802.11 b/g/n) supports WPA/WPA2 security. Use the Form 3+'s touchscreen to configure a wireless network connection.

When connected to an active Ethernet connection or available Wi-Fi network, the Form 3+ can be configured with a static IP address.

To connect with Wi-Fi using a manual IP configuration:

5. With an established Ethernet or available Wi-Fi connection, open the printer's Settings menu on the touchscreen.
   a. For Wi-Fi networks, tap Wi-Fi, then the desired wireless network.
   b. For Ethernet connections, open Ethernet from the Settings menu.
6. Toggle the Manual IP settings to "ON".
7. Input the appropriate IP Address, Subnet Mask, Default Gateway, and Name Server.

4.5 Transporting the Form 3+

Refer to the Technical Specifications for product weight and dimensions. Keep the packaging for transportation or shipping. The printer's complete packaging kit consists of:

- 1 outer carton, cardboard
- 1 lift tray, cardboard
- 1 bottom insert, foam
- 1 upper insert, foam
- 1 front insert, foam

NOTICE

Do not ship with resin inside the printer. Resin left inside the Form 3+ can damage the printer in transit, which may lead to additional fees or void the warranty.

To prepare to transport the Form 3+:

1. Always remove the build platform, resin tank, and cartridge before moving or packaging the Form 3+ printer.
2. Wipe residual resin from the build platform and store the platform away from sunlight.
3. Store the resin tank in the tank case.
4. Store the cartridge with the vent cap closed and the valve cover installed.

NOTICE

When shipping a printer to Formlabs for service, the build platform, resin tank, power and USB cables, and other accessories should not be shipped and will not be returned after service. The printer's original packaging is required for warranty service. Contact

other certified service providers for unique guidance on shipping requirements.

To package the Form 3+:

1. If the printer's outer cardboard carton has been collapsed, start by reassembling and securely taping the box's bottom opening.
2. To secure the LPU housing for shipping:
   c. Tap the wrench icon on the touchscreen to open the Settings menu. Find and select the shipping option to prepare the printer for shipping.
   d. Disconnect the power cable.
   e. Open the cover and locate the shipping latch mounting points on the left side of the LPU housing. The LPU housing is in the LPU garage on the right side of the printer.
   f. Align the two slots in the latch with the two screw holes in the side of the LPU housing. The short side of the latch should be oriented away from the front of the printer and point outwards from the LPU housing.
   g. Loosely thread the two thumb screws through the slots and into the LPU housing.
   h. Slide the latch toward the front of the printer so that it engages with the inside of the printer shell. If necessary, adjust the position of the LPU by manually turning the lead screw at the back of the printer cavity. The shipping latch should lay flat against the LPU housing when it engages with the slot in the printer shell.

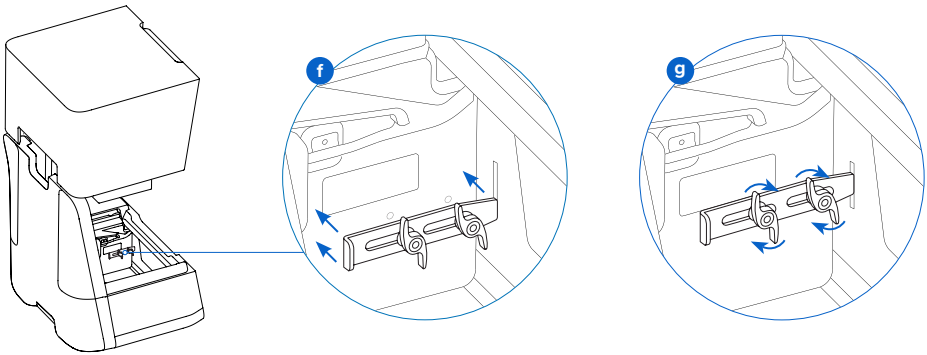

   i. Tighten both thumb screws to secure the latch. The latch does not move when both thumb screws are tightened.
3. Close the printer cover.
4. Securely wrap the seam between the printer's top cover and lower shell to maintain alignment in transit. Wrap with plastic wrap multiple times horizontally and vertically so the entire printer is covered and the cover is firmly stabilized.
5. Set the bottom foam insert in the cardboard lift tray.
6. Lift the printer to rest on the bottom foam insert.
7. Gently slide the printer into the outer carton.
8. Install the front foam insert to cover the left, right, and front of the printer.
9. Install the upper foam insert. The foam fits exactly around the top of the printer's cover.
10. Seal each edge of the side opening with adhesive packing tape.

5. Print with the Form 3+

5.1 Operational Environment

The operating temperature for Formlabs printers is 64–82 °F (18–28 °C). For optimal printing, do not exceed this range.

5.2 Printing

1.1.16 Download or Update PreForm

Visit the PreForm product webpage to download the latest version: formlabs.com/tools/preform
Learn to use PreForm from the tutorials available in the software menu.
For detailed guidance and visual assistance, search on **support.formlabs.com.**

1.1.17 Power the Printer On

Connect the power cable. The printer initiates automatically. To turn off the printer, see ***5.4.5 Power Off the Form 3+.***

1.1.18 Prepare File for Print

Use PreForm software to process STL or OBJ files.
Prepare, save, and upload FORM files to the printer.

1.1.19 Pre-Print Checks

The printer checks the following before each print job:

- Accessories - Sensors check for the proper installation of the resin tank, build platform, and resin cartridge.
- Temperature - The print chamber and resin heat to around 35 °C. A heating fan blows air across the heater into the resin tank to heat the resin.
- Resin - Resin flows from the cartridge into the tank when the cartridge dispense arm squeezes the valve open. The Form 3+ regulates the volume of resin in the tank through a sensor called the LevelSense board, which is located behind the resin tank. The printer begins to fill the resin tank once a print starts and maintains the level of resin in the tank during the print. Printing begins automatically when LevelSense detects the proper amount of resin.

1.1.20 Start or Stop a Print

To start a print, select the job on the touchscreen, and follow the prompts.
To stop a print in progress, select pause, then abort the print.

CAUTION

Moving parts. Do not open the printer cover until the touchscreen indicates the print is complete.

5.3 Finishing

Part finishing includes all steps after printing. Follow these steps to bring a 3D model from a digital file to a functional, printed part:

1. Print: Prepare the FORM file in PreForm, upload and start the print, and then monitor the print progress on Dashboard.
2. Wash: Use Form Wash or the Finish Kit to rinse the remaining liquid resin from printed parts' surfaces.
3. Dry: Allow at least 30 minutes for isopropyl alcohol (IPA) to fully evaporate after washing.

DANGER

IPA is flammable. Keep containers closed, and keep out of the reach of children.

4. Post-Cure: Use Form Cure to expose printed parts to light and heat to stabilize the parts for performance.
5. Post-Process: Remove supports, then use sanding, priming, or painting to improve presentation, or use other equipment to create molds from printed parts.

5.4 Managing the Printer

1.1.21 Connect to the Form 3+ with Dashboard

Dashboard (formlabs.com/dashboard) allows individuals and teams to remotely monitor Form 3+ printers, track material usage, and explore past and future Formlabs purchases. Register the Form 3+ to Dashboard through the touchscreen on the printer. Once the Form 3+ is registered to Dashboard and Dashboard logging is enabled on the printer, the Form 3+ will send data to Dashboard as long as the printer's Wi-Fi or Ethernet connections are able to access the internet.

1.1.22 Change Resin Types Between Prints

When changing resin types, always change both the tank and the cartridge. Remove the cartridge before removing the tank to prevent the cartridge valve from dripping resin into the printer.

See ***6.5.2 Maintain the Resin Tank*** and ***6.5.4 Remove and Replace the Cartridge.***

1.1.23 Manage or Delete Uploaded Prints

- To start an uploaded file:
  - Confirm the resin tank and cartridge match the file's resin type and version.
  - Tap the file name from the queue.
- To delete a print from the queue:
  - Tap the file name from the queue.
  - Tap delete.

1.1.24 Check and Maintain the Resin Temperature

The Form 3+ heats resin to a set temperature before starting a print. View the print chamber's current temperature on the touchscreen.

The print chamber is heated by hot air blown out of the tower behind the resin tank. The warm air in the print chamber heats the resin, and the air temperature is sensed by a thermal sensor at the air intake. The Form 3+ automatically pre-heats and maintains a consistent print chamber temperature before and between print jobs.

1.1.25 Power Off the Form 3+

Turn off the Form 3+ completely when moving or storing the printer and to conserve power. To turn off the Form 3+ completely, disconnect the power cord from the power source.

5.5 Emergency and Exceptional Situations

Formlabs has made every effort to provide updated Safety Data Sheets (SDS) for every resin product, in accordance with the latest government guidelines. Always consult the SDS as the primary source of information to understand safety and handling of Formlabs materials.

WARNING

In an emergency involving resin, always refer to the Safety Data Sheet (SDS) and/or seek help from a medical professional.

When handling IPA, always consult the safety Data Sheet (SDS) from the IPA supplier as the primary source of information. Handle IPA with gloves in a well-ventilated area. Keep away from heat, sparks, and open flame. IPA evaporates rapidly, so keep the rinse tub and bottles closed whenever possible.

Promptly clean and inspect the printer after a resin spill to minimize any cosmetic or functional damage to the printer. If you have experienced an accidental resin spill, document the problem with photos and clean the printer as best as possible. Contact Formlabs or a certified service provider as soon as possible.

6. Maintenance

WARNING

- Formlabs provides instructions to advise skilled and non-skilled persons in installing, operating, and maintaining the Form 3+. The Form 3+ shall only be maintained by a qualified and trained person.
  Do not open the Form 3+ and/or investigate internal components unless under the guidance of Formlabs or a certified service provider. Contact Formlabs or a certified service provider for any additional guidance.
- Unauthorized disassembly or repair procedures may damage the printer and void the warranty.
- Wear personal protective equipment when performing maintenance tasks. Use tools only as described.
- Disconnect the power cable before maintenance. Moving parts and lead screws present crushing and tangling hazards.

6.1 Inspecting the Product

1.1.26 Before Each Print

Inspect	Refer to:	Section:
Installation Environment	Operational Environment	5.1
Resin Cartridge Bite Valve	Inspect the Bite Valve	6.2.1
Resin Tank Interior	Maintain the Resin Tank	6.5.2

1.1.27 Monthly

Inspect	Refer to:	Section:
Resin Cartridge ID Chip and Reader	Protect the ID Chips on the Resin Tank and Resin Cartridge	6.3.1
Resin Tank Spring Fingers	Protect the ID Chips on the Resin Tank and Resin Cartridge	6.3.1
Resin Tank Exterior	Maintain the Resin Tank	6.5.2

1.1.28 Every 3 Months

Inspect	Refer to:	Section:
Cover	Inspect the Cover	6.4.1
Display	Inspect the Display	6.4.2
Drip Catcher	Inspect the Drip Catcher	6.4.3
Shells	Inspect the Shells	6.4.4
X- and Z-axis Lead Screws	Inspect and Lubricate the X- and Z-axes	6.4.5

6.2 Inspection Tasks Between Prints

1.1.29 **Inspect the Bite Valve**

The bite valve is located on the underside of the resin cartridge. This flexible seal regulates resin dispensing. Resin flows out of the opening in the center of the bite valve when the cartridge dispense arm squeezes the valve open.

When switching to a different resin cartridge, inspect the bite valve for any cured resin or damage.

1.1.30 **Inspect the Resin Tank Interior**

See ***6.5.2 Maintain the Resin Tank.***

6.3 Monthly Inspection and Maintenance Tasks

1.1.31 **Protect the ID Chips on the Resin Tank and Resin Cartridge**

ID (identification) chips on resin tanks and resin cartridges detect, track, and match the resin type in the tank with the proper resin cartridge. The ID chip is on the underside of each tank frame and on the bottom of the cartridge near the bite valve.

Protect the ID chips, the tank carrier, the tank spring fingers, and the cartridge spring fingers from resin contamination or damage. Cured resin or contamination prevents the printer from properly identifying a cartridge or resin tank during insertion or use. Avoid exposing the cartridge ID chip, the resin tank ID chip, the tank carrier, and the tank spring fingers to liquid resin.

1.1.32 **Clean the ID Chips or Spring Fingers**

To remove resin from the ID chip or spring fingers:

1. Apply a small amount of clean IPA to the tip of a cotton swab.
2. Rub the tip of the cotton swab onto the silver pads on the ID chip or onto and around the spring fingers. The cured resin or contamination dissolves.

NOTICE

Do not bend the spring fingers when cleaning. Ensure that any IPA on the ID chip dries completely before continuing printing.

1.1.33 **Inspect the Resin Tank Exterior**

See ***6.5.2 Maintain the Resin Tank.***

6.4 Periodic Inspection and Maintenance Tasks

1.1.34 **Inspect the Cover**

Visually inspect the cover for traces of resin, cracks, or other damage.

Clean the cover with a non-abrasive microfiber cloth and soapy water or a general purpose cleaner, such as glass cleaner.

In the case of a crack that allows light to pass through the cover, replace the cover. See ***7.5 Disassembly and Repair.***

1.1.35 **Inspect the Display**

Visually inspect the display for any traces of resin. Clean the display with a non-abrasive microfiber cloth and general purpose cleaner, such as glass cleaner.

1.1.36 **Inspect the Drip Catcher**

WARNING

Disconnect the power cable. Moving parts and lead screws present crushing and tangling hazards.

Remove the build platform, resin tank, and resin cartridge to access the drip catcher, which is the area below the resin tank spout or under the resin cartridge dispensing mechanism. Visually inspect the drip catcher. Clean any traces of resin or contamination with isopropyl alcohol (IPA) and paper towels.

1.1.37 **Inspect the Shells**

Visually inspect the rear, front, side, and top shells for traces of resin or other damage. Clean any traces of resin or contamination with soapy water and paper towels.

1.1.38 **Inspect and Lubricate the X- and Z-axes**

WARNING

Disconnect the power cable. Moving parts and lead screws present crushing and tangling hazards.

Wear clean gloves to handle the lead screw and lubricant.

To inspect the X-axis:

1. Manually rotate the X-axis lead screw.
2. As the LPU housing moves right and left, listen, look, and feel to check for areas that emit noise or where the carrier sticks or move less smoothly.
3. Visually inspect the X-axis to ensure that no debris or foreign objects obstruct the lead screw or path of motion.
4. Visually inspect the X-axis to ensure that lubricant covers the full length of the threads.

To inspect the Z-axis:

1. Manually rotate the Z-axis lead screw.
2. As the build platform carrier moves up and down, listen, look, and feel to check for areas that emit noise or where the carrier sticks or move less smoothly.
3. Visually inspect the Z-axis to ensure that no debris or foreign objects obstruct the lead screw or path of motion.
4. Visually inspect the Z-axis to ensure that lubricant covers the full length of the threads.

In the case that the screw is missing lubricant or if the X- or Z-axis emits intermittent noises when printing, lubricate the lead screw.

To lubricate the X- or Z-axis lead screw:

1. Remove the build platform and resin tank.
2. Place a clean low-fiber paper towel over the tank carrier and LPU housing.
3. Remove old and dirty grease from the lead screw using a paper towel.
4. Apply a light layer of lithium grease evenly along the lead screw. Apply the lubricant directly from the container or by dabbing lubricant onto the lead screw with a gloved hand.
5. Manually rotate the lead screw.
   a. Z-axis: As the build platform carrier moves up and down, listen, look, and feel to check for areas that emit noise or where the carrier sticks or moves less smoothly.
   b. X-axis: As the LPU housing moves right and left, listen, look, and feel to check for areas that emit noise or where the carrier sticks or moves less smoothly.
6. Wipe excess lubricant from the lead screw with a microfiber cloth or low-fiber paper towel.
7. Reconnect the power cable.

6.5 Planned Maintenance Procedures

For detailed guidance and visual assistance, search on **support.formlabs.com.**

Maintenance tasks shall be done according to the following plan:

Task	Frequency	Section:
Update the firmware	When PreForm indicates a new firmware version is available	6.5.1
Replace the resin tank	Replace when wear on the film begins to affect print quality	6.5.2
Replace the resin cartridge	When the cartridge is empty, after 1 liter of printing	6.5.4
Filter the resin	When you can visually see particles in the tank	6.5.3

1.1.39 Update Form 3+ Firmware

Formlabs regularly releases updated firmware to fix bugs and improve functionality. Review the PreForm and firmware release notes to learn more about the improvements that come with each version's release.

1.1.40 Maintain the Resin Tank

CAUTION

Spill hazard. Resin may spill over the tank walls if the resin tank tilts more than 5-10°. Hold the resin tank level with two hands. To inspect and clean the underside of the tank, empty the resin tank and/or take care to avoid spilling resin outside the tank. Sharp and metal tools can damage the dual-layer film in the resin tank and affect print quality. Do not use sharp or metal tools in the resin tank. Use only the tank tool to clean the inside of the resin tank.

To inspect the Resin Tank interior:

1. Use the tank tool to inspect the resin and the film. See ***7.3 Cleaning After a Failed Print,*** steps 1-3.
2. Check for the following issues that may lead to print failures or any excessive wear that requires replacing the tank:

- cured resin on the film
- debris or failed prints in the resin
- punctures, cuts, or gouges in the film

3. Check that the mixer and float are properly installed in the tank case. See ***4.3.3 Insert the Resin Tank and Mixer.***
4. Follow cleaning instructions to remove cured resin, failed prints, debris, and settled pigment. For moderate wear or scratches on the film, use the Layout toolbar in PreForm to print outside the worn or scratched area. In the case of excessive wear or scratches on the film, replace the tank.

To inspect the Resin Tank exterior:

1. Visually inspect the film on the underside of the tank for fingerprints, dust, contamination, and scratches, which cause the laser light to diffuse and lead to print failures or inaccuracies.
2. Use cleaning instructions to remove any fingerprints, dust, or contamination on the film before printing.

To clean the Resin Tank:

- Print failures:
  - See ***7.3 Cleaning after a Failed Print.***

- Debris or contamination in the resin:
  - See ***6.5.3 Filter the Resin.***
  - Clean, debris-free resin helps avoid print failures, which may damage the tank.
- Settled pigment in the resin: Resin pigment can settle onto the film. To supplement the mixer's function, slide the tank tool against the film to remove settled pigment.
- To clean the underside of the film:

1. Apply a small amount of clean IPA to a PEC*PAD.
2. Wipe the surface of the film to remove contamination or resin.

- To clean the Resin Tank frame exterior:

3. Use a paper towel to clean resin from the exterior of the tank frame.
4. Keep the sides of the tank clean and free of resin.
5. Avoid resin on the underside of the film, because the contamination may result in print failures and/or damage to the slider.

To replace the Resin Tank:

1. Remove the build platform.
2. Hold the side walls of the resin tank.
3. Gently pull - away from the printer and upward - the resin tank to release the tank from the tank carrier.
4. Store the resin tank in the tank case with the lid installed. To dispose of the resin tank, see ***8.1.1 Disposal of resin.***
5. To install a new resin tank, see ***4.3.3 Insert the Resin Tank and Mixer.***

1.1.41 **Filter the Resin**

For detailed guidance and visual assistance, search on **support.formlabs.com.**

To filter resin:

6. Suspend the paint or oil filter (with a "fine" or ~190 micron mesh size) above an opaque plastic container suitable for storing resin. Use a ring stand to reduce the risk of spilling resin.
7. Wear gloves to remove the tank and mixer. Place the mixer aside on a protected surface.
8. Hold the edge of the tank, taking care not to touch the tank's film.
9. Tilt the resin tank with the spout aligned directly above the filter.
10. Pour the resin through the filter, into the disposable container.
11. Gently scrape the surface of the resin tank to pull resin toward the spout.
12. Once all resin passes through the filter, pour the resin back into the tank.

To dispose of the used filter, see ***8.1.1 Disposal of resin.***

1.1.42 **Remove and Replace the Cartridge**

For detailed guidance and visual assistance, search on **support.formlabs.com.**

To replace the cartridge:

13. Press the vent cap closed.
14. Hold the cartridge handle.
15. Lift the cartridge out of the printer.
16. Store or dispose of the cartridge. For detailed guidance and visual assistance, search on **support.formlabs.com.**
17. To install a new resin cartridge, see ***4.3.5 Insert the Resin Cartridge.***

NOTICE

Store the cartridge upright with the valve cover installed to protect storage surfaces from resin.

7. Troubleshooting and Repair

For detailed guidance and visual assistance, search on **support.formlabs.com.**

7.1 Collecting Diagnostic Logs

The Form 3+ maintains diagnostic logs to provide detailed information about the printer that may expedite issue investigation. After experiencing any error or unusual behavior on the Form 3+, include the diagnostic logs with other relevant observations and details when contacting Formlabs Support.

The options for sharing diagnostic logs vary depending on the printer's connection type.

7.2 Performing a Factory Reset

NOTICE

Do not perform a factory reset immediately before contacting support. The stored diagnostic information may be helpful for Formlabs to assist with troubleshooting.

A factory reset erases diagnostic information and custom settings, uploaded jobs, and networked connections.

7.3 Cleaning After a Failed Print

WARNING

Resin may cause skin irritation or an allergic skin reaction. Wear gloves when handling liquid resin or resin-coated surfaces. Wash skin with plenty of soap and water.

NOTICE

Sharp and metal tools can damage the film in the resin tank and affect print quality. Do not use sharp or metal tools in the resin tank. Use only the tank tool to clean the inside of the resin tank.

A failed print may leave small, partially-cured pieces of resin floating in the tank or hard cured resin stuck to the film in the base of the tank. Inspect the tank after every print. Remove debris after a failed print.

Optional: Remove the resin tank from the printer. Place the resin tank in the tank case.

1. To remove debris from the resin tank:
2. Separate the top and bottom parts of the tank tool. Place the top part aside.
3. Prepare several paper towels nearby to collect cured and uncured resin.
4. Rest the long edge of the tank tool on the film inside the resin tank. Skim the surface of the film. Search for obstructions that indicate cured resin stuck to the film.
   a. To remove cured resin:
   b. Slide the long edge of the tool under the edge of the cured resin.
   c. Pry with moderate pressure. Slide or pry from different angles or increase pressure to detach cured resin from the film's surface. The cured resin detaches.
   d. Rest the cured resin on the blade of the tank tool.

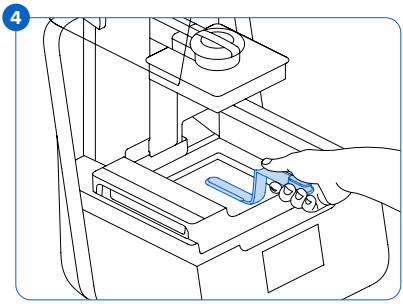

e. Lift the cured resin out of the resin tank.
   I. If the tank tool cannot hold the cured resin:
      2. Attach the top part of the tank tool to the bottom part.
      3. Squeeze the cured resin between the two ends.
f. Rest the cured resin on the paper towel.

5. Dispose of cured resin. See ***8.1.1 Disposal of resin.***
6. Clean the tank tool and work area.

To clean the tank tool:

1. Apply clean IPA to a clean paper towel.
2. Wipe the surface of the tank tool to remove resin.
3. Allow the tank tool to air dry.

Or:

1. Rest the tank tool in the Form Wash basket.
2. Set Form Wash to clean for 5 minutes. Increase the time for solvent that is less fresh.
3. Allow the tank tool to air dry after washing.

7.4 Troubleshooting

In the case of an error or abnormal activity with the Form 3+, reference the following errors, causes, and proposed solutions. Complete the initial troubleshooting steps and carefully document all results. Contact Formlabs or a certified service provider for additional assistance.

1.1.43 Resolve Abnormal Functions During Print Set-Up

Error	Cause	Solution
The bite valve does not dispense resin.	The silicone material has sealed itself. Resin may cure over the bite valve opening.	To troubleshoot a closed bite valve: 1. Close the vent cap and remove the resin cartridge from the printer. 2. Turn the cartridge upside down to inspect the bite valve. 3. Squeeze the valve a few times to open up the seal and enable resin flow. 4. If squeezing the valve does not enable resin flow, carefully use the tip of the tweezers from the Finish Kit or Form Wash to push through the opening to enable resin flow. 5. If the bite valve seal remains closed after troubleshooting, contact Formlabs Support for additional help. Submit photos of the bite valve seal with your request.
The orange "Print" icon is not available in PreForm.	The printer may not be properly connected to the same local network.	Consider the following: • Check to see that you do not have other open instances of PreForm. • Save any files before restarting PreForm. • Re-connect your printer to establish a proper connection.
Missing Resin Tank; Missing Cartridge	The ID chip(s) is dirty or missing.	1. Fully remove the resin tank and/or cartridge. 2. Check the ID chip on the resin tank and/or cartridge to ensure the ID chip is present and clean. 3. Clean the ID chip, if necessary. **See 6.3.1 Clean the ID Chips or Spring Fingers.** 4. Re-insert the resin tank and/or cartridge.

4.1.1 Resolve Print Failures and Errors

Print failures can manifest in different ways and originate from different causes. Check the model's configuration in PreForm, the cleanliness of the optical surfaces, and the printer's operating condition according to 6 Maintenance and 7 Troubleshooting and Repair, including the proposed solutions below.

If print failures persist after following these steps, contact Formlabs or a certified service provider for additional guidance. In order to introduce a known good variable to isolate any printing issues, run a Formlabs test print, for which the file is available on **support.formlabs.com.** Provide clear, focused photographs of the test print to help diagnose the issue.

Error	Cause	Solution
Delamination Peeling or separation between printed layers Pieces of cured parts floating in the resin tank	Model orientation, layout, and/or support issues A print that has been paused for a long time An older resin tank A loose build platform Contaminated optical surfaces	Consider the following: • Check the model in PreForm. • Check for pauses in printing. • Check the resin tank for debris or damage. • Check cleanliness of optical surfaces. • Check the build platform's stability.
Non-Adherence Prints either partially attached to or completely non-existent on the build platform	Printing without supports The first layer of the part on the build platform is too small to withstand peel forces. Debris/damage in resin tank Contaminated optical surfaces Build platform height requires adjustment	Consider the following: • Print with a base and supports. • Check the print's surface area. • Check the resin tank for debris or damage. • Check cleanliness of optical surfaces. • Check the build platform height.
Overcompression The base printed onto the build platform is thinner than expected and/or very difficult to remove.	The initial layers fail to cure properly, due to insufficient space between the build platform and the film in the resin tank.	Consider the following: • Increase the base height in PreForm's advanced settings. • Check the build platform height.
Poor Surface Finish Cured or partially cured resin forms thin, shelf-like structures that hang horizontally from a print. OR A rough - uneven or bumpy - surface texture forms on one or both sides of an otherwise successful print.	Diffused laser light spreads the cure area beyond the appropriate limits for each layer outline, due to: Expired resin; Debris/damage in the resin tank; Contaminated optical surfaces; or, Restricted resin flow due to improper model orientation or overly dense supports	Consider the following: • Check the resin's shelf life. • Check the resin tank for debris or damage. • Check cleanliness of optical surfaces. • Check for restricted resin flow.
Undeveloped Feature A void of missing material forms within a print and widens as the print builds away from the build platform.	Debris/damage in resin tank Model orientation, layout, and/or support issues Contaminated optical surfaces	Consider the following: • Check the resin tank for debris or damage. • Check the model in PreForm. • Check cleanliness of optical surfaces.

Error	Cause	Solution
Holes or Lines Models have linear cuts or holes.	Obstructions in the optical path block the laser from curing resin in a specific part of the model.	Consider the following: • Check the underside of the resin tank for debris or damage. • Check cleanliness of optical surfaces.

7.5 Disassembly and Repair

WARNING

All steps that involve opening the printer and/or investigating internal components should be done by skilled persons under the guidance of Formlabs or a certified service provider.

Contact Formlabs or a certified service provider to receive repair instructions and authorization, including how to disassemble or remove the shells.

Task	Frequency
Replace the slider	When the slider is damaged and does not move smoothly or after 300,000 layers.
Replace the Light Processing Unit (LPU)	When advised by Formlabs or a certified service provider

8. Disposal

8.1 Guidance for Recycling and Disposal

CAUTION

Refer to the Safety Data Sheet (SDS) and local authorities for guidance on disposing of IPA.

4.1.2 Disposal of resin

Liquid resin (whether pure liquid, dissolved in alcohol, or partially cured) may be classified as hazardous waste and shall be disposed of with care.

Disposing of empty resin containers:

In the United States, empty resin containers are considered "RCRA empty" by EPA standards and can be thrown in the garbage as regular waste.

Optional - Triple rinse the cartridge with fresh IPA to empty the resin cartridge of traces of excess resin. Add the resulting dirty IPA to your solvent waste stream in accordance with governmental regulations.

To dispose of a resin tank:

1. Remove the resin tank.
2. Transfer or dispose of the remaining resin.
3. Pour the resin from the old tank to the new tank or another container. If there is debris or cured parts in the resin, filter the resin before transferring it to a new tank.
   a. Pouring resin back into the original cartridge may risk contaminating the cartridge with cured resin pieces or debris, which can cause print failures.
4. Use a paper towel to wipe any remaining resin off the old tank.
5. Place the old tank in sunlight (a window sill is fine) or UV light to cure excess resin, and dispose of properly once cured.

Disposing of liquid resin:

To dispose of pure resin (resin that has not been cured or dissolved in alcohol), add this waste to your chemical disposal stream.

If you do not have a chemical disposal stream:

1. Pour a small amount of resin into a labeled, resin-compatible container.
2. Leave the container outside, exposed to sunlight to cure for 1-10 days. Expose resin to 405 nm light and heat for the most effective curing. The liquid resin cures to solid material when exposed to light and heat.
3. Dispose of the fully-cured resin and container in the trash.

Disposing of cured resin or cleaned parts:

Discard cleaned parts and cured (hardened) resin with household items as trash. Cleaned parts and cured resin cannot be recycled.

4.1.3 Disposal of IPA and solvents

Safe and appropriate disposal methods of used IPA vary by location.

To safely dispose of dirty IPA:

4. Consult the safety data sheet (SDS) from the IPA supplier as the primary source of information.
5. Research your local government's approved methods of disposal. This will most likely involve hiring a waste disposal service or, for smaller amounts, checking with your city's disposal service to see if they have any suggestions for removal.

6. Inform your waste disposal service that your bottle contains IPA with small amounts of methacrylated monomers and oligomers (unpolymerized plastic resin) and trace amounts of photoinitiator. Have a copy of the resin SDS on hand in case the attendant needs more information.

For large volumes of IPA, consider using a solvent recycling system, which offers a cost-effective and more environmentally responsible alternative to paying for waste solvent disposal services. Solvent recycling systems use distillation and fractionation processes to remove solutes from waste solvents, making it possible to re-use the IPA to wash parts. The recycled IPA may still have small amounts of monomer in it. Recycling IPA reduces waste disposal costs, emissions that are required to produce solvents, and the cost of purchasing IPA.

4.1.4 Disposal of electronic components

The symbol on the product, the accessories, or packaging indicates that this device shall not be treated as nor disposed of with household waste. When you decide to dispose of this product, do so in accordance with local environmental laws and guidelines. Dispose of the device via a collection point for the recycling of waste electrical and electronic equipment. By disposing of the device in the proper manner, you help to avoid possible hazards for the environment and public health that could otherwise be caused by improper treatment of waste equipment. The recycling of materials contributes to the conservation of natural resources. Therefore do not dispose of your old electrical and electronic equipment with the unsorted municipal waste.

4.1.5 Disposal of packaging waste

Save the Form 3+ packaging for transporting your printer. Original packaging is required for warranty service and designed to be kept and reused for transportation or shipping.

The packaging is made of cardboard and plastic-based materials. Dispose of packaging through your local waste and recycling facilities. By disposing of the packaging waste in the proper manner, you help to avoid possible hazards for the environment and public health.

9. Index

B

bite valve 15, 21, 22, 27, 33
build platform 7, 8, 10, 14, 16, 18, 23, 25, 28, 33, 34, 35
  platform carrier 14, 23
  platform lock 14, 33, 34

C

clean 11, 13, 20, 22, 23, 24, 25, 26, 27, 33, 34, 35
  cleaning 11, 22, 24, 26, 35
comply 6, 10
  compliance 3, 4, 6, 10, 11, 36
contamination 22, 23, 24, 25
  debris 11, 23, 24, 25, 26, 28, 29, 30, 33
  dust 24
  oil 25
  scratches 24, 33
cover 8, 9, 11, 12, 14, 15, 16, 17, 18, 21, 22, 25, 33, 35

D

Dashboard 15, 18, 19
diagnostic logs 26
display 8, 21, 22, 33, 35
disposal 25, 27, 30, 31
drip catcher 21, 22, 23

E

error 8, 26, 27, 28, 35
Ethernet 7, 11, 13, 15, 16, 19, 33

F

filter 24, 25, 30
Finish Kit 12, 18, 27
firmware 24

I

ID chip 22, 27, 33, 35
install 12, 14, 17, 25
  installation 3, 4, 18, 21
isopropyl alcohol 9, 11, 18, 23
  IPA 11, 18, 19, 20, 22, 23, 25, 27, 30, 31

L

laser 7, 9, 24, 28, 29, 33, 34, 35, 36
lead screw 17, 23, 34
level 9, 12, 13, 15, 18, 24, 34
  leveling 8, 13, 34
LevelSense 18, 33, 34, 35
Light Processing Unit 7, 12, 29, 34
LPU 12, 17, 23, 29, 34, 35
  LPU housing 12, 17, 23, 34, 35

M

mixer 13, 14, 24, 25, 34

O

operation 4, 9, 10
optical window 11, 35

P

power 7, 9, 12, 13, 16, 17, 18, 19, 21, 22, 23, 34
PreForm 15, 18, 24, 27, 28, 35
print failures 24, 25, 28, 30
  failed print 24, 26

R

resin cartridge 7, 8, 15, 18, 21, 22, 23, 24, 25, 27, 30, 33, 35
  vent cap 15, 16, 25, 27, 35
resin spill 20
resin tank 7, 8, 11, 13, 14, 15, 16, 18, 19, 21, 22, 23, 24, 25, 26, 27, 28, 29, 30, 33, 34, 35
  film 24, 25, 26, 28, 33, 34, 35
  tank case 35

S

safety 3, 4, 6, 9, 10, 11, 19, 20, 30, 33, 36
Safety Data Sheet 10, 20, 30
SDS 10, 19, 20, 30, 31
shell 17, 35
shipping 7, 12, 16, 17, 31
  latch 12, 17
  package 17
    packaging 3, 12, 14, 16, 31
  transport 16
    transporting 12, 16, 31
  unboxing 12
slider 25, 29, 34, 35
specifications 6, 7, 9, 11, 16
spring fingers 21, 22, 27, 33, 35

T

tank tool 24, 25, 26, 27, 35
technical data 6
temperature 7, 18, 19, 33
  heat 11, 18, 19, 20, 30
touchscreen 7, 8, 13, 16, 17, 18, 19, 33, 34, 35

U

USB 7, 13, 15, 16, 35

W

warranty 4, 5, 6, 12, 15, 16, 21, 31
Wi-Fi 7, 13, 15, 16, 19, 35

Z

Z-axis 21, 23, 33, 35

10. Glossary

Term	Meaning
Cover	The upper enclosure, made of strong, amber-tinted material, blocks exposure to the laser and protects the resin from curing due to ambient light.
Bite valve	This flexible seal regulates resin dispensing. Resin flows out when the cartridge dispense arm squeezes the valve open.
Build Platform - see also, platform lock	The aluminum base provides a surface for prints to attach to. Over time, the build platform will develop scratches from part removal, which can assist with print adherence.
Build Platform carriage	The carriage is the metal arm that the build platform slides onto.
Build Platform sensor	Inserting the build platform triggers a limit switch in the Z-axis. The printer detects when the build platform is properly installed in its home position.
Cartridge (Resin Cartridge)	This container holds the resin before dispensing into the resin tank. Shake the cartridge periodically to keep resin well mixed.
Cartridge dispense arm	This plastic hook presses against the bite valve to dispense resin out of the cartridge into the resin tank.
Cartridge ID chip	An Electrically Erasable Programmable Read-Only Memory (EEPROM) chip programmed with the resin type is attached to the cartridge skirt. This chip communicates to the printer via spring fingers on the cartridge floor.
Cartridge spring fingers	Two electrical contacts comprise the spring fingers located on the cartridge floor. The physical contact establishes an electrical connection with the cartridge ID chip to detect the cartridge.
Display assembly	The display assembly contains the touchscreen and the display circuit board. A ribbon cable connects the display assembly to the motherboard.
Display cable	A flat, flexible cable connects the display assembly to the motherboard.
Ethernet port	The Form 3+ can connect to a network via Ethernet. The port is connected to the motherboard and can be accessed from the back of the machine.
Fans	A heating fan blows air across the heater into the resin tank. Cooling fans pull warm air away from electronic components.
Film	A durable, dual-layer film comprises the bottom surface of the resin tank. Parts print in the resin-filled gap between the film and the build platform. The quality of printed parts depends on the film being clean and clear of damage and debris.
Film tensioner	A motor pulls outward on the tank side walls to create a taut film surface in the resin tank.
Float	A hinged bobber rests on the surface of the resin. The aluminum counterweight passes in front of the LevelSense board to determine the amount of resin in the tank.
Heater	The resin in the resin tank is heated by hot air blown out of the tower behind the resin tank. The warm air in the print chamber heats the resin, and the air temperature is sensed by a thermal sensor at the air intake.
Interlock magnets	The interlock sensor detects these magnets to determine when the cover is closed. This safety mechanism triggers the “cover open” message on the touchscreen and disables the laser when the cover is open.

Laser	The laser is the source of curing energy in the Form 3+. It has a 405 nm violet diode and a maximum output of 250 mW. The Form 3+ is a Class 1 laser product.
Lead screw	The lead screws are threaded rods that control the vertical motion of the build platform carriage and the horizontal motion of the LPU housing.
LevelSense	Two inductive coils determine the amount of resin in the tank by detecting the relative height of the float.
Leveling feet	Each corner of the printer is supported by a rubber foot that is threaded into the bottom of the machine. When prompted by the touchscreen, use the leveling disc to raise or lower each foot to ensure that the printer is acceptably level.
Light Processing Unit (LPU)	The interchangeable assembly contains the laser and the mirrors that control the path of the laser, ensuring a clean, crisp laser spot. The LPU is secured in the right-hand side of the LPU housing.
Light Processing Unit (LPU) cable	A flat, flexible cable connects the LPU to the motherboard.
Light Processing Unit (LPU) housing	The aluminum housing for the optics engine moves left and right, traveling along the X-axis lead screw. The LPU, slider, and mixer are all controlled within the LPU housing.
Limit switch board	A single board connects to two optical sensors to detect when the build platform carriage reaches the top of the tower and when the build platform is installed.
Low Force Stereolithography (LFS) 3D printing	An advanced form of stereolithography (SLA) with integrated image processing to deliver an ideal laser spot and cure solid isotropic parts from liquid resin.
Mixer	Each resin tank includes a mixer that improves print consistency by clearing the build area and circulating the resin. The mixer attaches to the slider with magnetic coupling and rests under the mixer case when not in use. Scrapers on the top and bottom of the mixer clear the build platform and film, respectively.
Mixer case	When not in use, the mixer rests in a partially enclosed compartment on the left side of the resin tank. The float is permanently attached inside the mixer case.
Motherboard	The motherboard is the main circuitry through which all systems in the printer communicate.
Platform lock	This lever is part of the locking mechanism that secures the build platform.
Platform lock set screws	These three screws are used for adjusting the tension in the platform lock. Contact support before adjusting these screws, as improper adjustment can lead to damage to the machine.
Platform lock spring	The spring mechanism inside the build platform carriage allows the platform lock to move up and down. It also mechanically locks and unlocks the build platform.
Power supply	The Form 3+ utilizes a 100–240 V ~ power supply. The internal power supply converts line power to +24V DC.

Resin Tank	The resin tank is the primary container for holding resin after it is dispensed from the cartridge. Resin is cured onto the build platform when the laser passes through the tank's bottom film. Only use approved materials and processes to clean the resin tank and film.
Resin Tank ID chip	The resin tank's ID chip uses Electrically Erasable Programmable Read-Only Memory (EEPROM). The tank spring fingers read the chip to detect the unique tank ID and current resin type.
Shell	Five protective external casings protect the printer's internal components: (1) Rear shell: a plastic casing for the back of the printer. (2) Side shells: metal casings for the left and right sides. (1) Top shell: a plastic casing to protect the area surrounding the resin tank, under the cover. (1) Front shell: the glass display assembly is attached to a plastic panel, which encases the front of the printer below the cover.
Slider	The slider is a metal surface that allows for smooth movement of the LPU housing across the flexible film. The slider surrounds the glass optical window. A clean slider protects the flexible film and preserves print quality.
Tank carrier	The assembly holds the resin tank and tensions the film. The tank carrier is covered by the top shell and houses the film tensioner, LevelSense, resin tank spring fingers, tank catch flexures, and interlock sensors.
Tank carrier rails	The resin tank side walls connect to linear slots on each side of the tank carrier. While printing, the rails pull the tank walls and the film into tension.
Tank case	Each resin tank includes a lidded container for storing the resin tank when not in use.
Tank handles	Plastic handles on each side of the resin tank allow for easy insertion, removal, and carrying of the tank. Avoid touching the bottom of the resin tank, as fingerprints can leave smudges that obstruct the optical path.
Tank spout	This spout at the back of the resin tank sits underneath the cartridge dispense hole and receives resin from the cartridge.
Tank spring fingers	These electrical contacts, at the back of the resin tank carrier, read the resin tank's EEPROM ID chip to sense the tank's presence and to communicate the resin type to PreForm.
Tank tool	Inspecting and cleaning the interior of the resin tank requires a special two-part spatula. This is the only tool to clean the interior film surface.
Touchscreen	The LCD capacitive touch user interface displays print information, settings, and error messages.
USB port	The Form 3+ can connect to a computer via USB. The port is connected to the motherboard and can be accessed from the back of the machine.
Vent cap	The lid at the top of the cartridge allows for air interchange, enabling proper resin dispensing. Push the vent cap open prior to printing.
Wi-Fi antenna	The Wi-Fi antenna enables the Form 3+'s wireless connectivity. The antenna pokes through a hole on the printer's motherboard.

Z-tower	This vertical tower at the back of the printer provides support for many parts of the Form 3+. The build platform is raised and lowered along the Z-axis, inside the tower. The Z-tower also encloses the resin cartridge, the heater, and the mechanisms for dispensing the resin into the tank.

11. Product Compliance

The Form 3+ complies with the following electrical and laser safety standards:

Electrical

- UL 62368-1, 2nd Ed., 2014-12-01
- CSA C22.2 NO. 62368-1-14, 2nd Ed., 2014-12-01
- EN 62368-1:2014 + A11:2017,
- AS/NZS 62368.1:2018
- J62368-1 (2020)

Laser

- IEC 60825-1:2014
- EN 60825-1:2014

FDA performance standards for laser products except for deviations pursuant to Laser Notice No. 56, dated May 8, 2019

UL File Number E477754